AMANDA
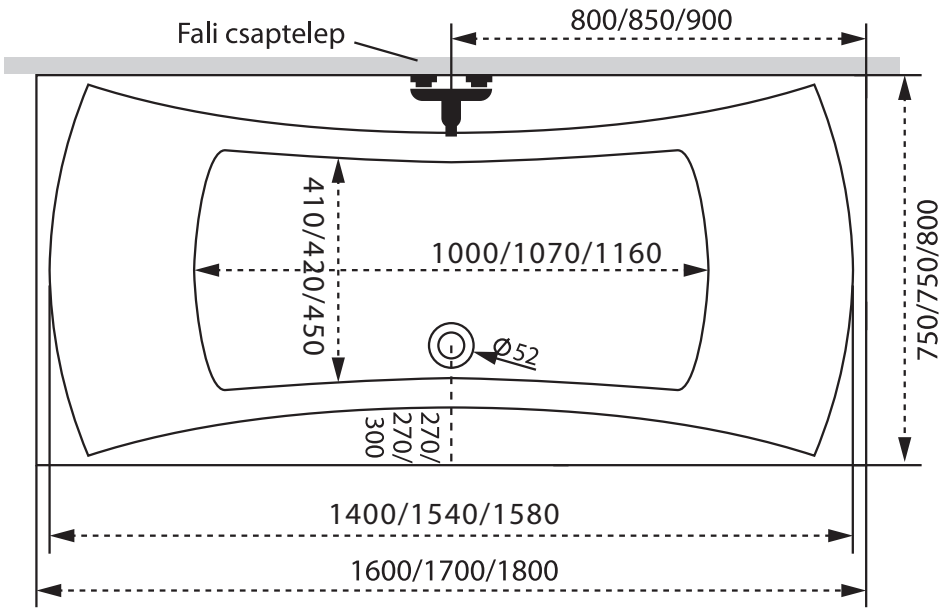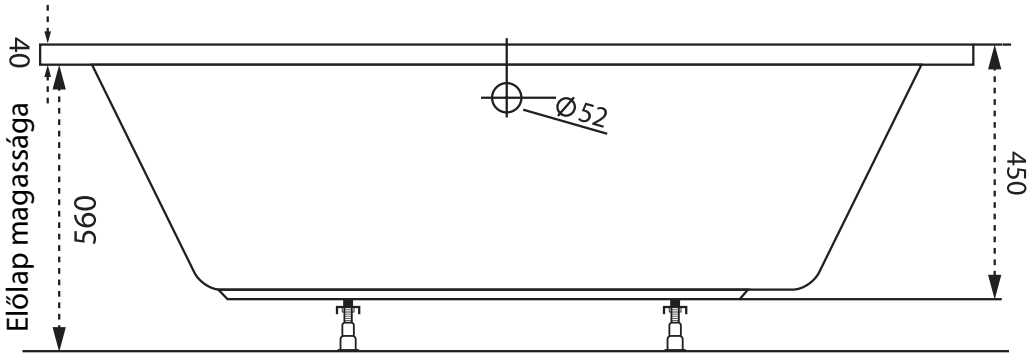
160x75 | 170x75 | 180x80